OUTLINE DIMENSIONAL DRAWING

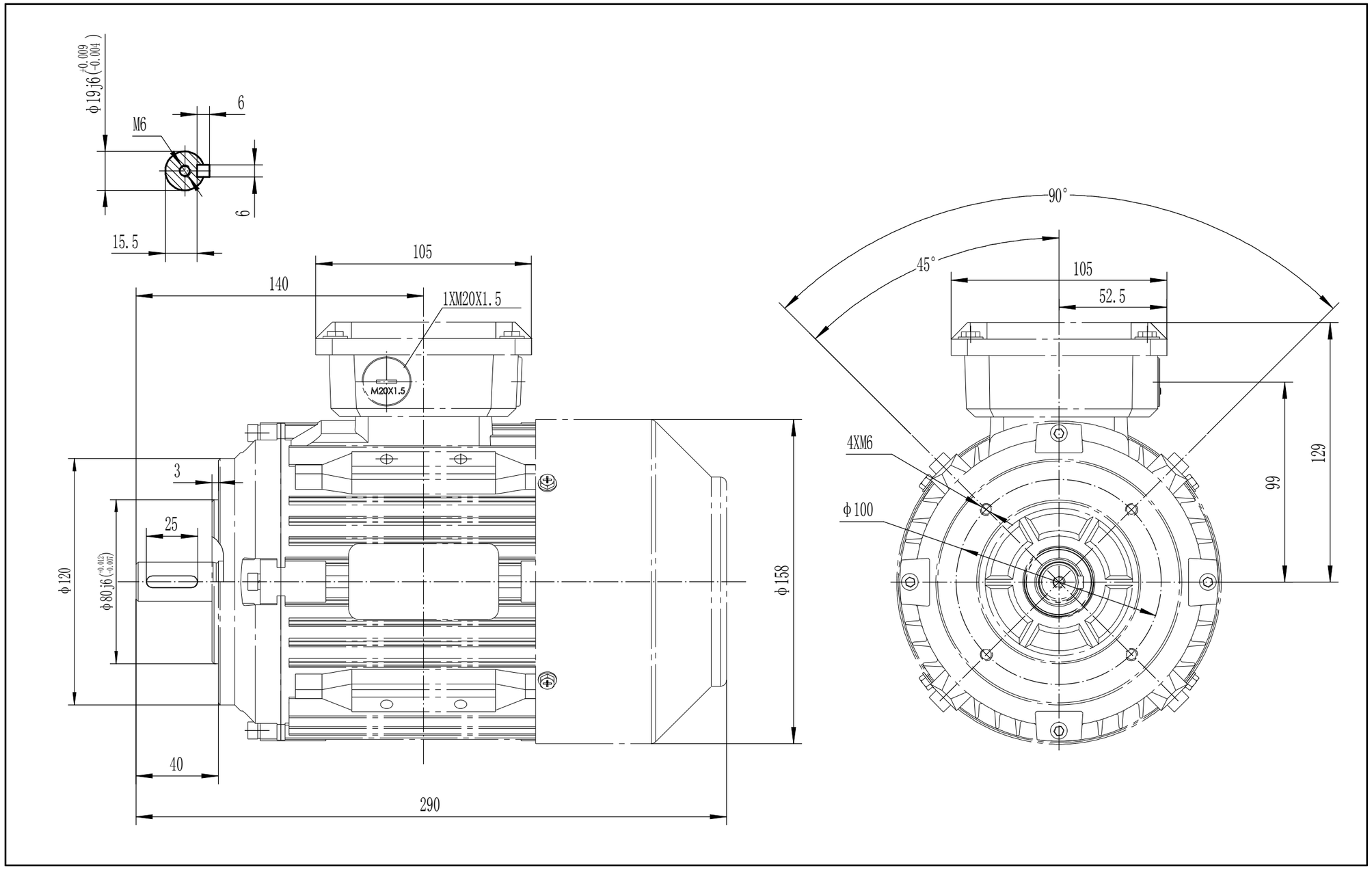

TECHTOP
AUSTRALIA

TECHTOP AUSTRALIA PTY LTD	
FRAME	TCI 80 B14
DATE 2012/05/10	DRAWING NO. 1HMY.010.T003B